

Product Dimensions (mm)

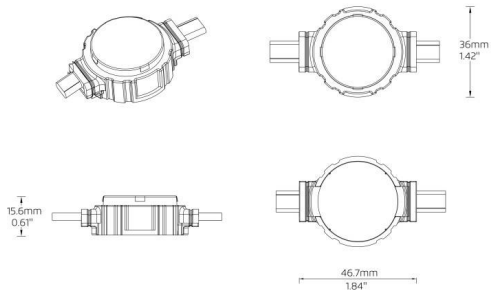

Installation Method 1

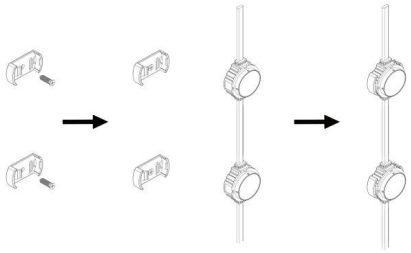

Installation Accessories

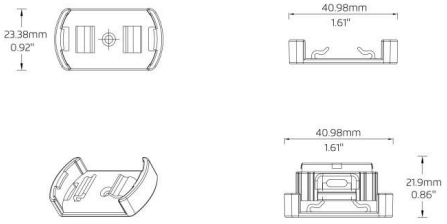

Installation Method 2

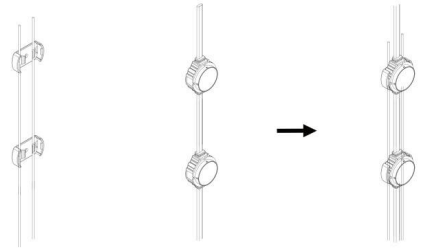

Installation Method 3

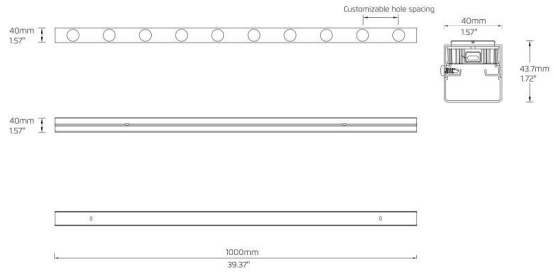

Control System Diagram

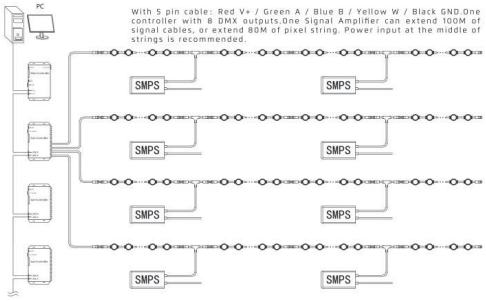

Installation Method 4

